SNAP DOCK PWC ASSEMBLY & CONNECTION KIT

SDDK1	PWC Dock	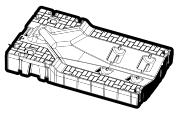	**X1**
SDDK2	PWC Dock	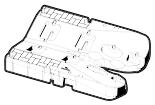	**X1**
SDCT1	Connector Tool		**X1**
CAPSD1	Snap Dock Cap	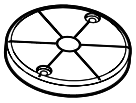	**X2**
SDW1	Wheel		**X12**
SDLR1	Large Rod 14.5"	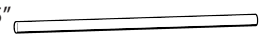	**X8**
SDC1	Connector		**X4**
SDCR1	Connector Rod(10")		**X2**
NSD1	Connector Nut	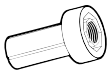	**X2**
SSD125	Cap Screw		**X4**
CAPSD2	Snap Dock Cap		**X6**
SDRE1	Rod End		**X20**
SDS1	Spacer		**X48**
SDSR1	Small Rod 8"		**X4**

TOOLS REQUIRED:

- 15/16" socket with ratchet/box wrench to suit or medium adjustable wrench

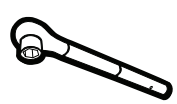

OR

1

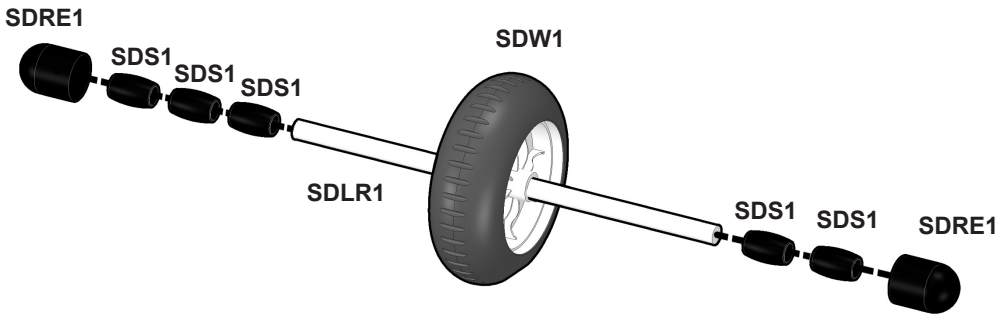

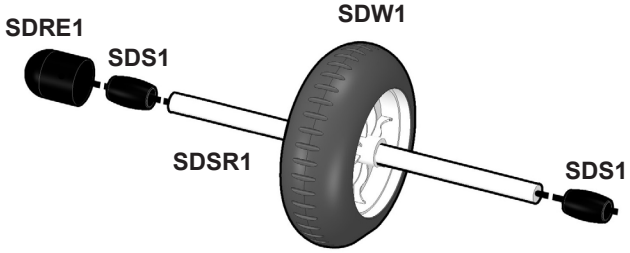

2

Wheel Rod Assembly **X8**

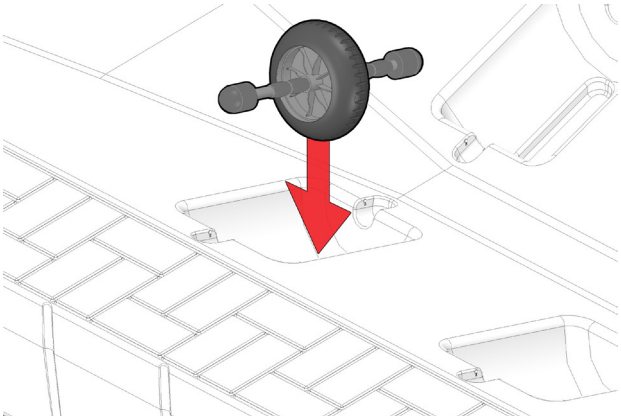

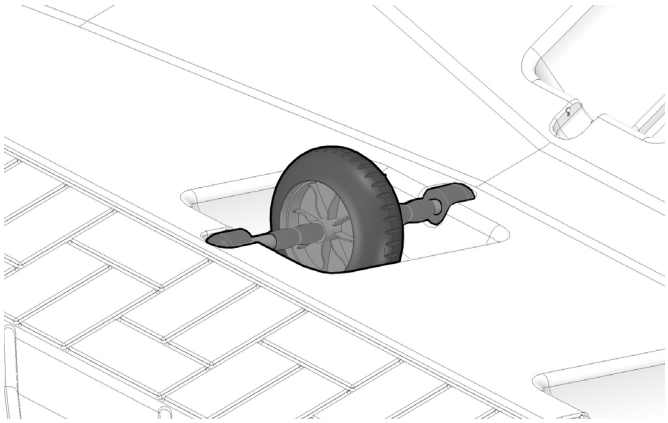

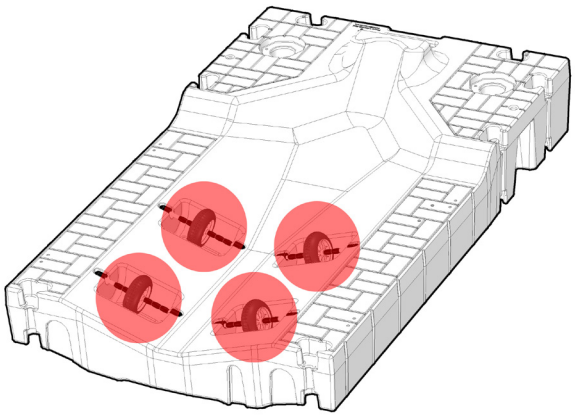

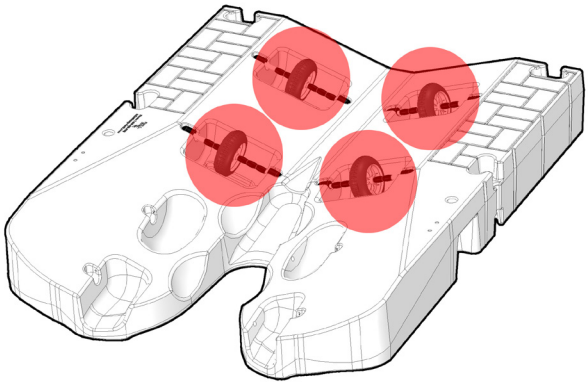

3

Wheel Rod Assembly **X4**

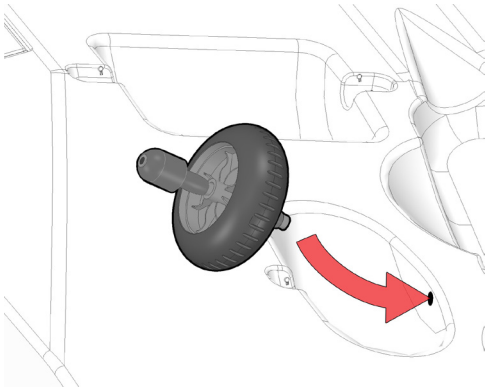

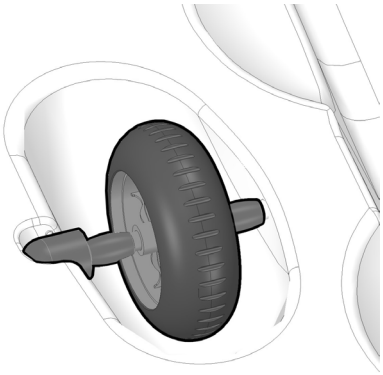

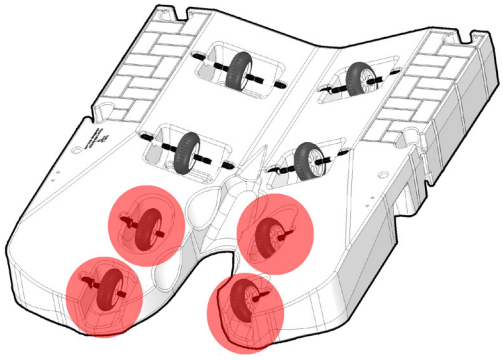

4

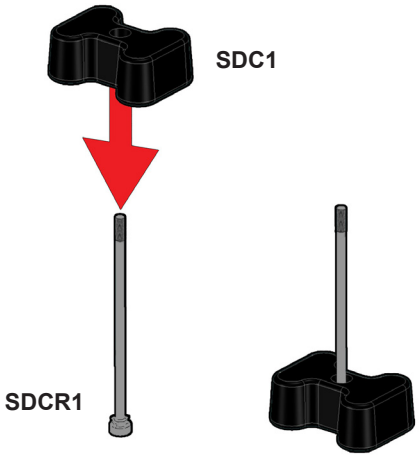

SDC1		X2
SDCR1		X2

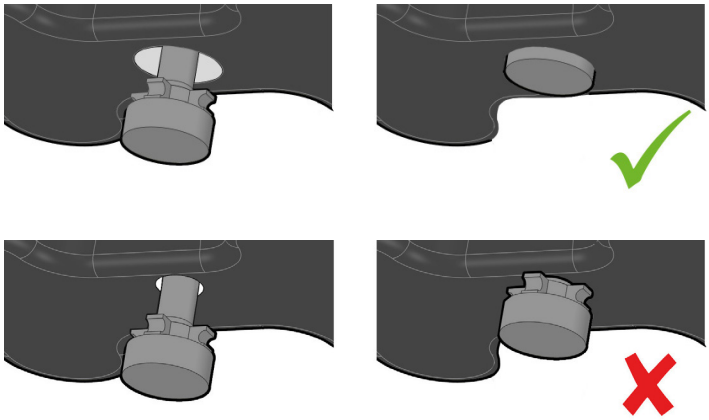

5

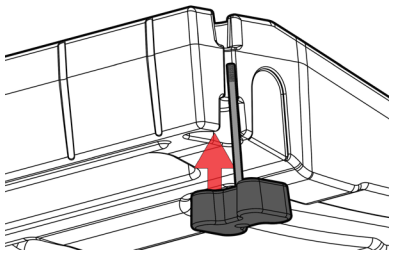

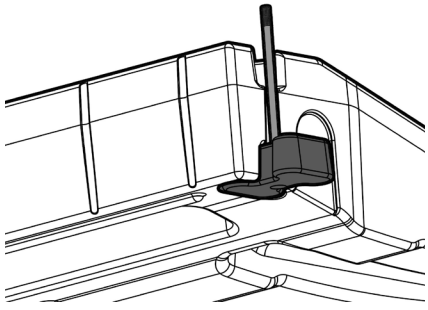

SDDK1	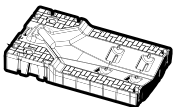	X1

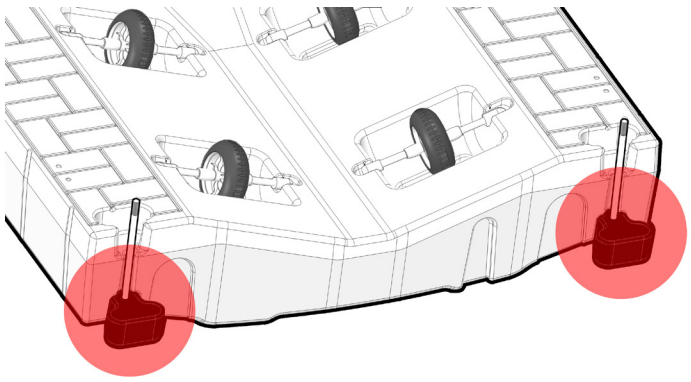

6

SDDK2 X1

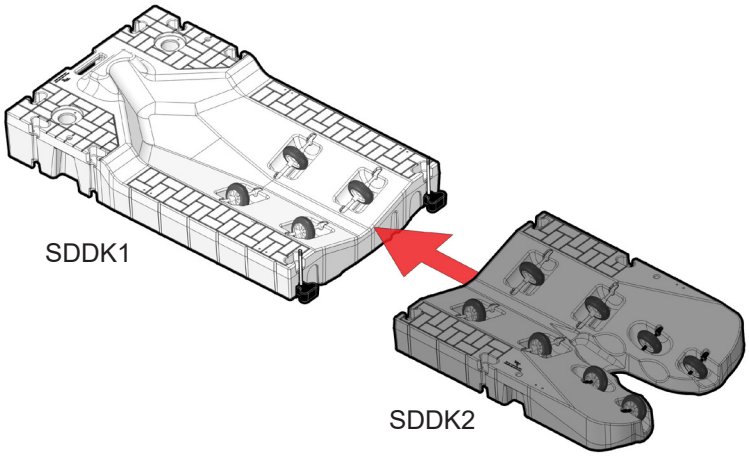

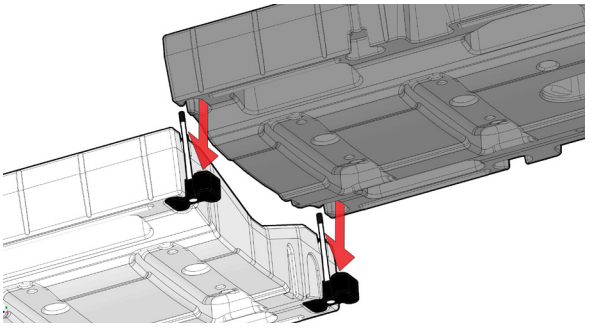

7

SDC1 X2

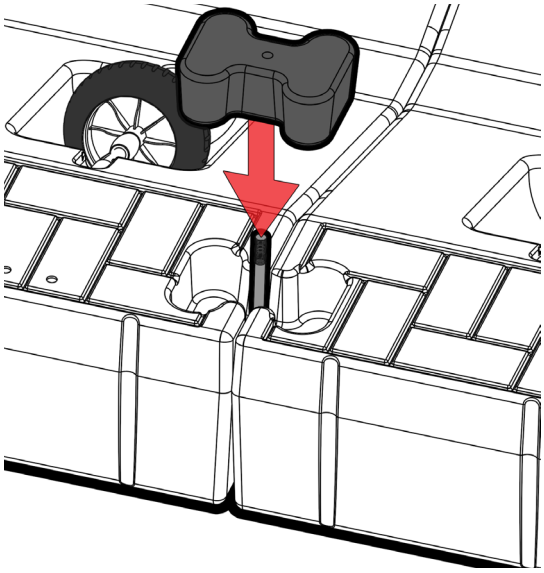

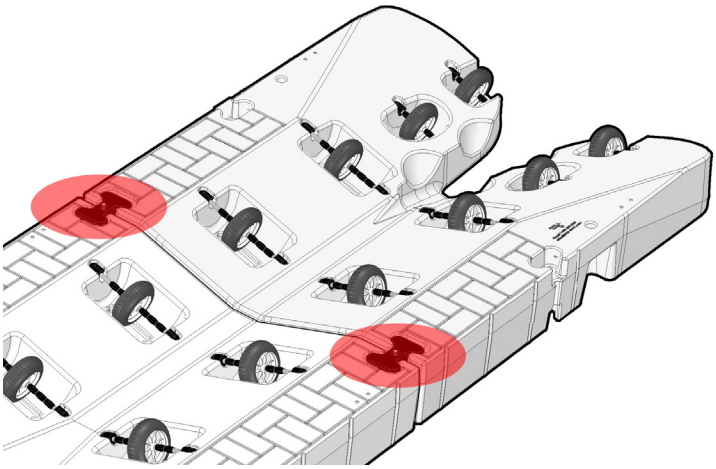

8

NSD1 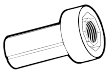 X2

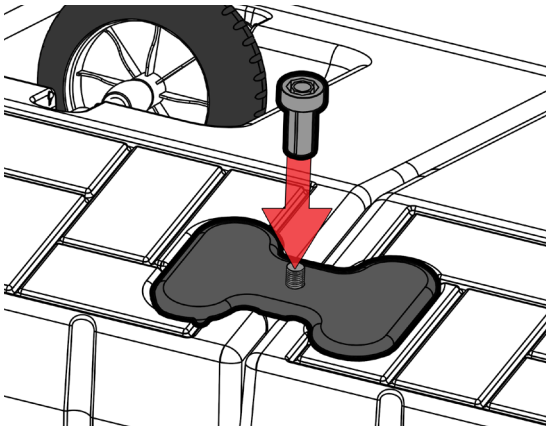

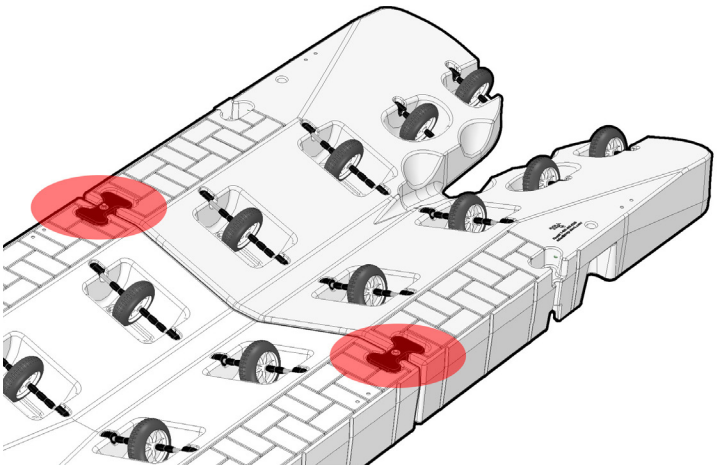

9

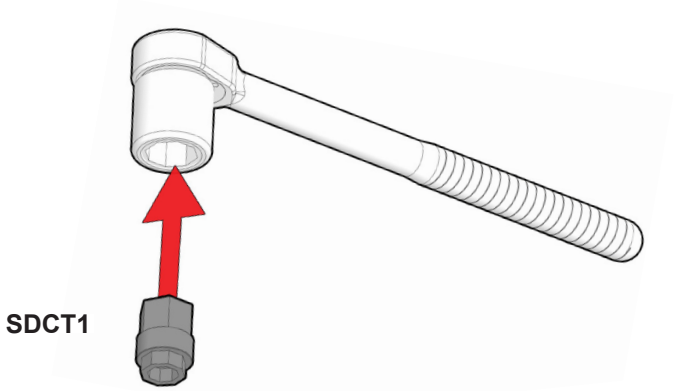

SDCT1 X1

10

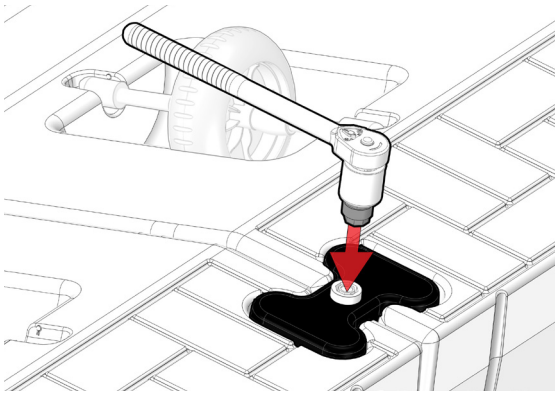

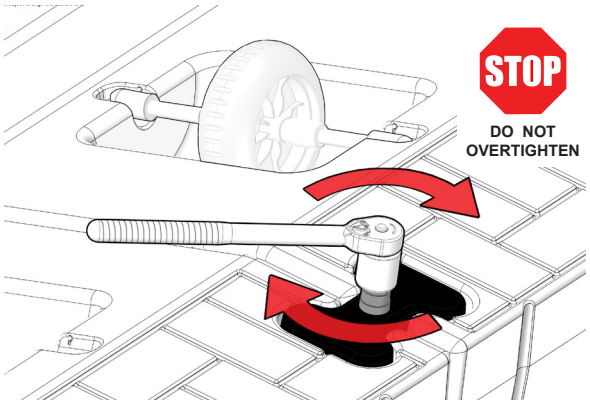

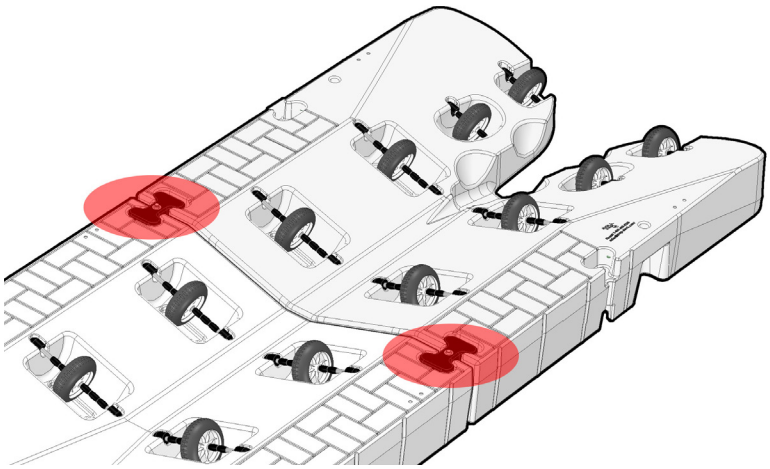

11

SSD125 X4

CAPSD1 X2

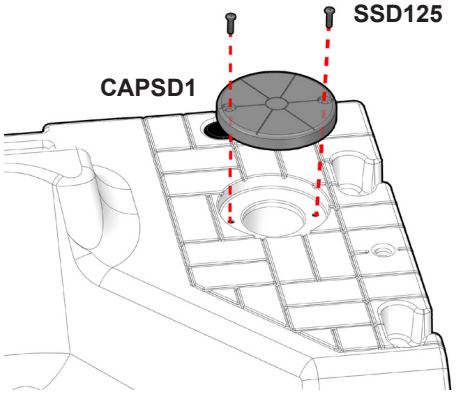

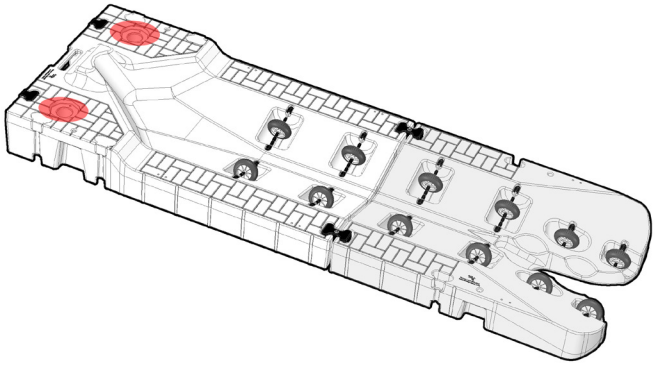

12

CAPSD2 X6

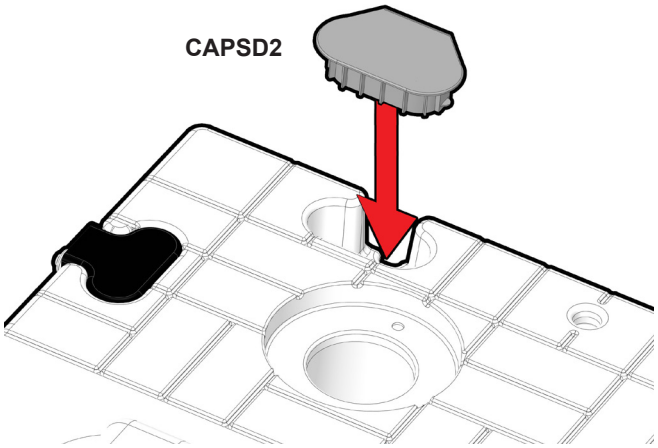

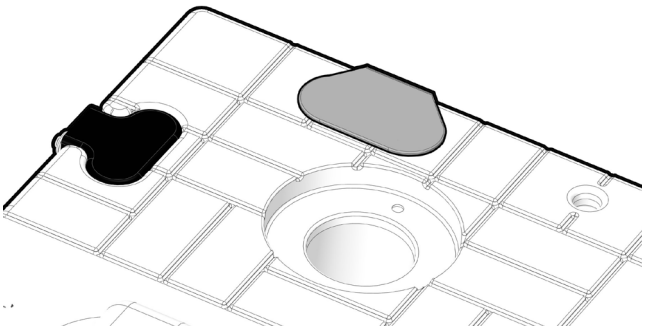

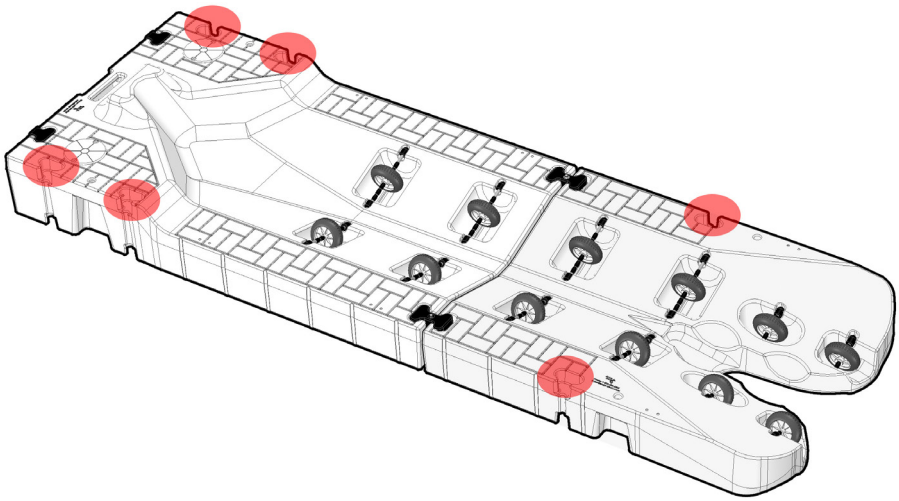
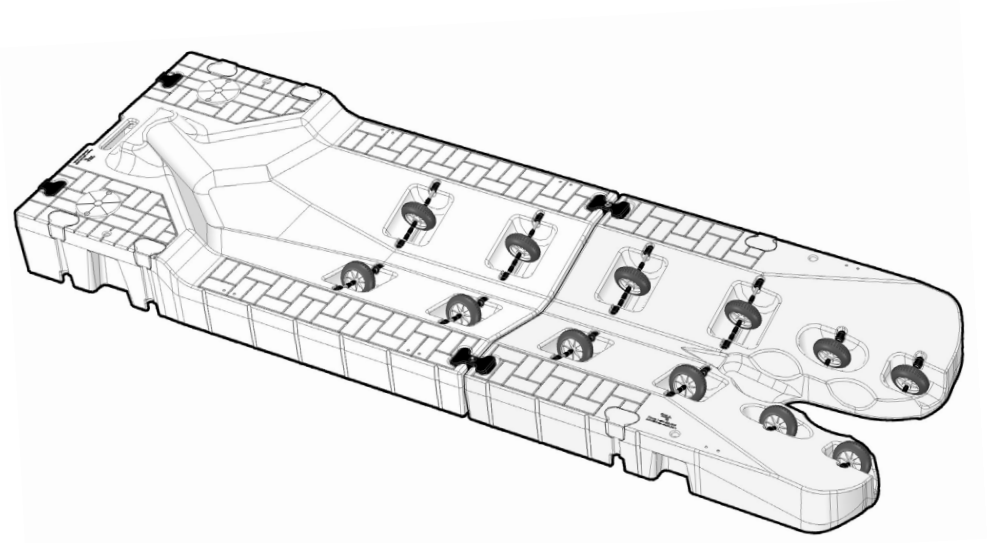
13